/ Perfect Welding / Solar Energy / Perfect Charging

Fronius International GmbH
Froniusplatz 1, 4600 Wels

FLEXTRACK 45 PRO

FLEXTRACK 45 PRO

AREAS OF USE

/ Longitudinal welding
/ Orbital welding

INDUSTRIES

/ Power generation
/ Ship building
/ Container construction
/ Bridge building
/ Steel construction

WELDING PROCESSES

/ MIG-MAG
/ CMT

FEATURES

MULTI-PURPOSE

Longitudinal - & Orbital applications
Flat and curved surfaces
Horizontal & vertical use

TPS/i READY

DESIGN

Compact & lightweight for easy handling
For use even in harsh environmental conditions

INDIVIDUALLY CONFIGURABLE

Torch oscillation
ACC Module
Mechanical seam tracking
Application specific rail types

PERFECT WELDING RESULTS

Constant adherence to travel speed for reproducible welding quality

EASY OPERATION

Completely operable via remote control.

APPLICATION EXAMPLES

FLEXIBLE RAIL
(CURVED PARTS)

RIGID RAIL
(FLAT PARTS)

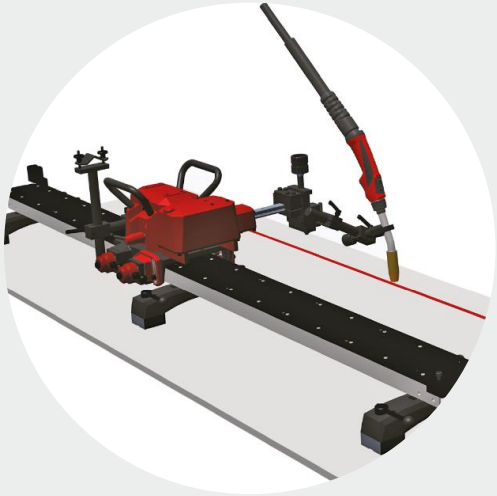

RING
(ORBITAL APPLICATIONS)

MAIN COMPONENTS

REMOTE CONTROL FRC-45 BASIC & PRO

/ Operation of the carriage, oscillation unit and ACC module
/ Integrated magnetic holder to place it on ferritic surfaces

CONTROL BOX

/ For carriage and remote control

CARRIAGE FLEXTRACK 45 PRO

/ Robustes aluminium housing
/ Constant welding speed
/ Quick assembly
/ Versatile expandable
/ TPS/i ready

REMOTE CONTROL FRC-45 *BASIC*

FEATURES

- Robust and ergonomic design
- Digital display
- Integrated magnetic holder
- Adjustable parameter:
  - Welding direction, welding speed
  - Oscillation parameter
  - Segment welding (linear welding & orbital)
  - Dwell time, end-crater filling

REMOTE CONTROL FRC-45 *PRO*

FEATURES

- / Robust and ergonomic design
- / Comfortable **operation of carriage and TPS/i power source** via touch display and multi-function wheel.
- / Free programmable function keys (F1 – F4)
- / Integrated magnetic holder

WELDHEAD COMPONENTS

MIG-MAG / CMT TORCHES

MOTORIZED SLIDES (ACC)

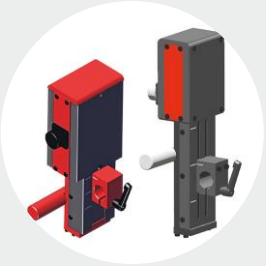

SEAM TRACKING

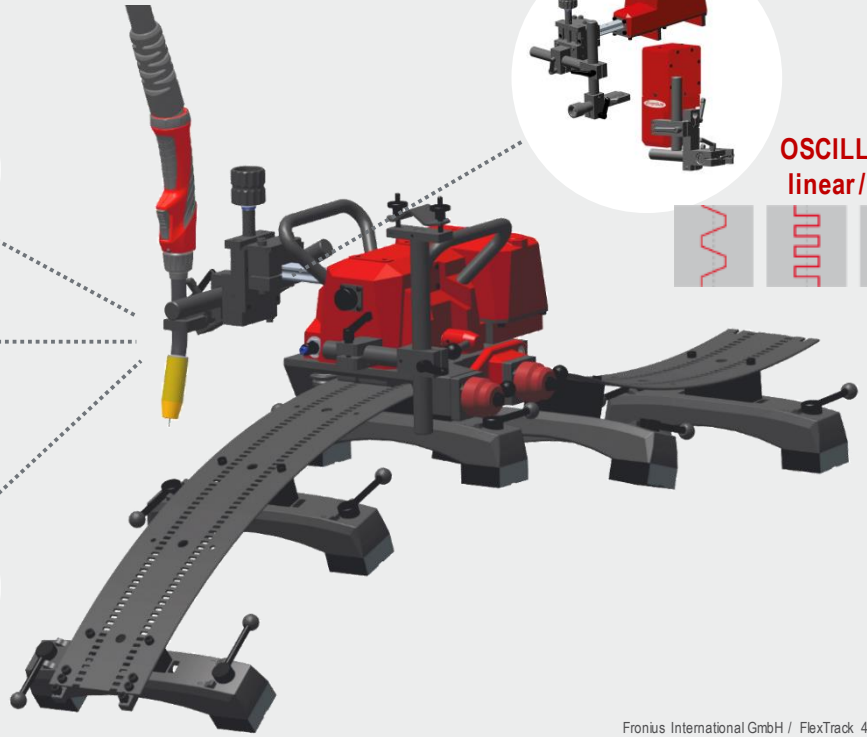

OSCILLATION linear / radial

RAIL TYPES & BRIDGE ELEMENTS

STRAIGHT

FLEXIBLE

RING

BRIDGE WITH SCREW FOOT

MAGNETIC BRIDGE

VACUUM BRIDGE

RAIL TYPES

Flexible Rails

/ To mount on flat or curved surfaces

/ **Areas of use**:
/ Ship building, Boiler-/ container construction, …

Rigid Rails

/ For horizontal and vertical welding applications

/ **Areas of use:**
/ Steel construction, bridge building, …

Flexible / rigid ring

/ For Orbital welding applications

/ **Areas of use:**
/ Pipeline construction

Ring with fixed radius

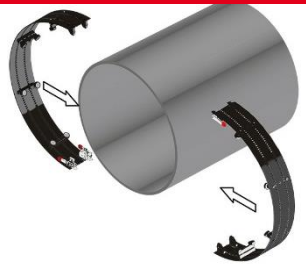

/ Pre-bent ring rails with a fixed radius. For a very quick and easy install-ation on tubes / pipes.

BRIDGE ELEMENTS

Magnetic bridges

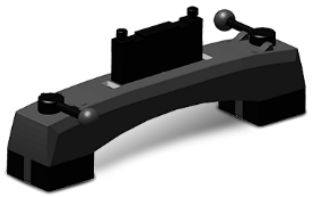

- For flexible & rigid rails
- Mountable on ferritic materials
- Magnetic strength can be adjusted

Vacuum bridges

- For flexible & rigid rings
- Mountable on parts with flat surfaces (aluminium, stainless steel)

Screw feet bridges

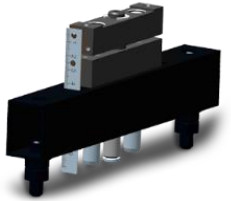

- For rigid rings
- Mountable on all Materials and surfaces

Magnetic bridges

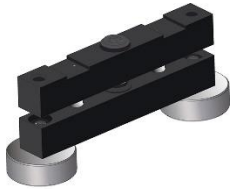

- For ring segments with fixed radius
- Mountable on ferritic materials

Spacer with spring

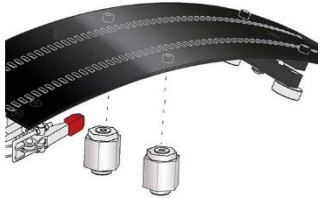

- For ring segments with fixed radius
- Mountable also on non-ferritic work pieces

WELDHEAD COMPONENTS

Oscillation radial

/ **Areas of use:**

/ Filletweld seams

/ Vertical-up seams

Oscillation linear

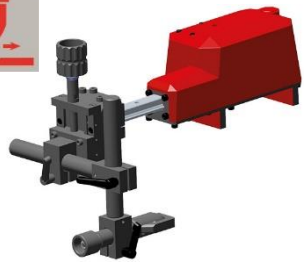

/ **Areas of use:**

/ Butt welds

/ Multi-layer seams

AAC Module FMS 50

/ **Arc Current Control**

Automatic distance control between the torch and the workpiece **(does not work on aluminium materials!)**

ACC Module FMS 100

/ **Arc Current Control**

Automatic distance control between the torch and the workpiece **(does not work on aluminium materials!)**

ACCESSORIES

Trolley for wire feeder

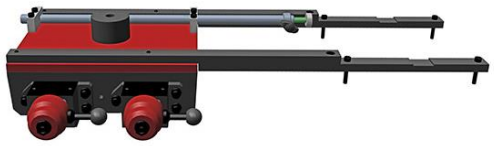

- For use on straight rigid rails in PA position
- Compatible with VR 4000, VR 5000 or WF25i wire feeder.

Vacuum pump

- Dry-running, oil-free rotary vane vacuum pump
- Suction power for up to 13 vacuum bridges

Transport case

- Robust and convenient plastic housing
- Foam insert to protect the carriage
- Rollers for convenient transport

TECHNICAL DATA

CARRIAGE	
Welding position	PA, PB, PC, PF, PG
Material thickness	min. 4 mm
Horizontal driving speed	5 – 300 cm/min
Vertical driving speed	5 – 250 cm/min
Endcrater filling time	0 – 5 seconds
Max. load horizontal / vertical	45 / 30 kg
Weight (without torch holder)	8,5 kg
Protection class	IP 23

CONTROL BOX	
Mains voltage	115 / 230 V, 50Hz
Supply voltage	24 V DC
Weight (without cable)	4,5 kg
Protection class	IP 23

All information is without guarantee in spite of careful editing - liability excluded.

Intellectual property and copyright: all rights reserved. Copyright law and other laws protecting intellectual property apply to the content of this presentation and the documentation enclosed (including texts, pictures, graphics, animations etc.) unless expressly indicated otherwise. It is not permitted to use, copy or alter the content of this presentation for private or commercial purposes without explicit consent of Fronius.